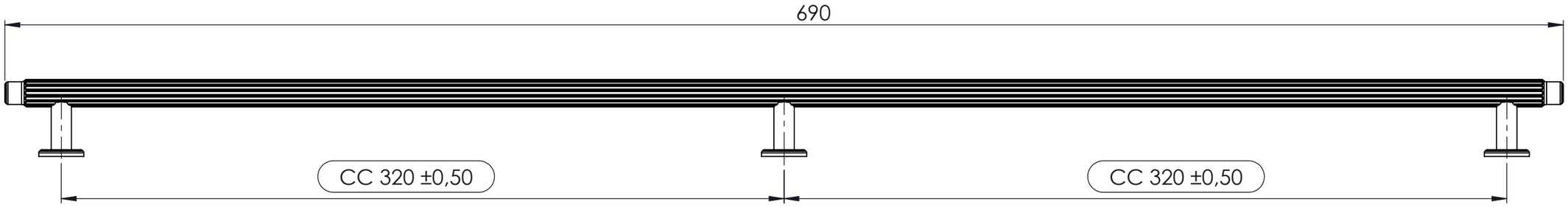

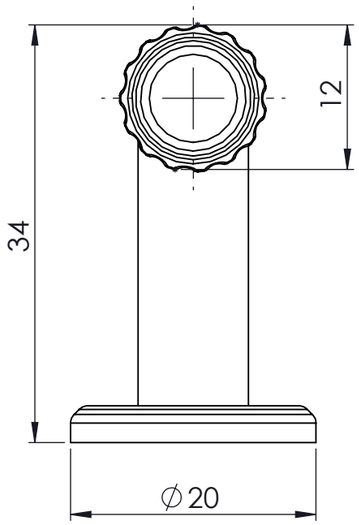

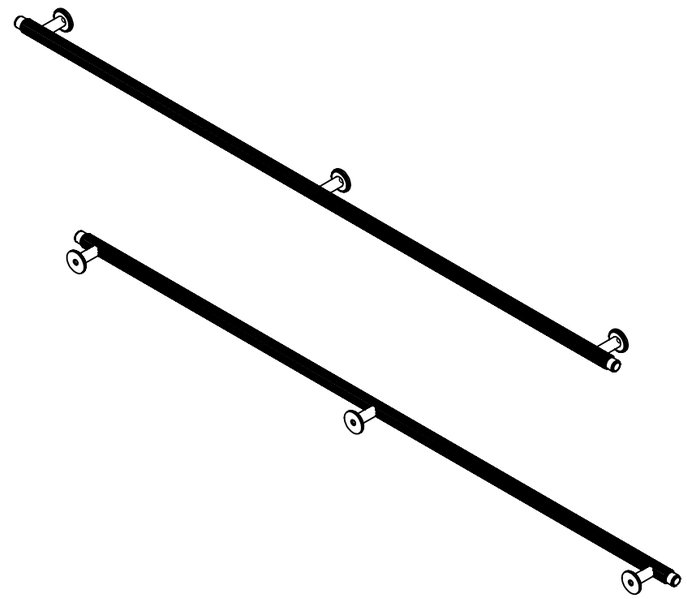

Part name:	Projection:	Sheet format:	Tolerance unless otherwise specified DS/ISO 2768-1M
Villa long		A3	
	Sheet: 1 of 1	Scale: 1:5	
Designer:	Drawn by: NLS 16-05-2024	Weight:	
Item no.: 553040640	Finish requirements (PS-004)		
Material: ALU/ ZAMAC	A = Most important surface B = Important surface C = Less important surface		

Linear dimensions:	0-3	3-6	6 - 30	30 - 120	120 - 400	400 - 1000	1000 - 2000
	±0,1	±0,1	±0,2	±0,3	±0,5	±0,8	±1,2

Angle:	±0,5°	Radius:	±5%

furnipart®
Delta 2
DK-8382 Hinnerup
Phone: +45 87 64 35 00
E-mail: fp@furnipart.com

Requirements confer PS-001 Technical Specifications

Rev.:	Date:	Name:	Description:

COPYRIGHT: THIS DRAWING MAY NOT BE COPIED OR REPRODUCED IN ANY WAY WITHOUT DIRECT PERMISSION FROM FURNIPART A/S